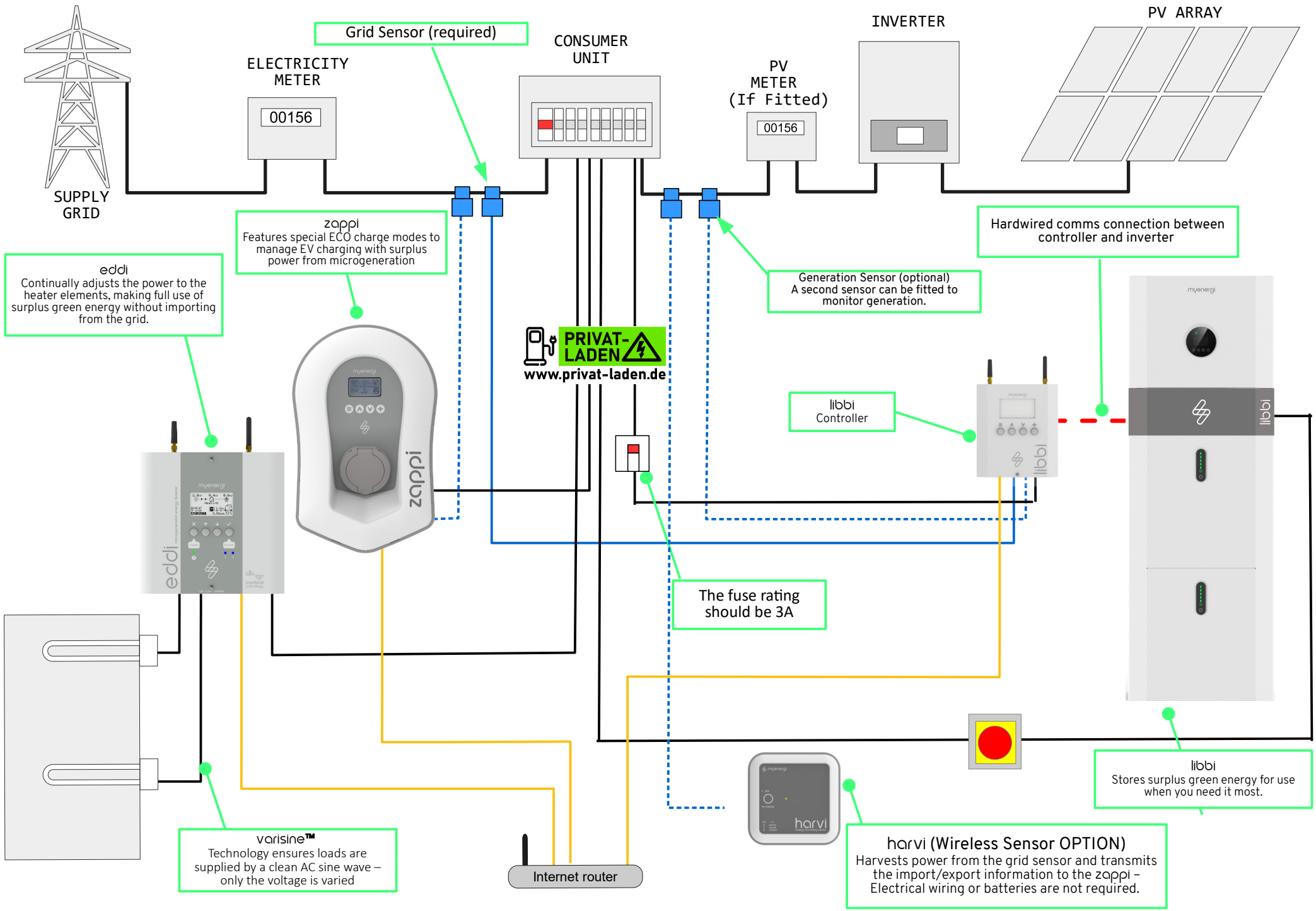
SUPPLY GRID
ELECTRICITY METER
00156
Grid Sensor (required)
CONSUMER UNIT
PV METER (If Fitted)
00156
INVERTER
PV ARRAY
zappi
Features special ECO charge modes to manage EV charging with surplus power from microgeneration
eddi
Continually adjusts the power to the heater elements, making full use of surplus green energy without importing from the grid.
Generation Sensor (optional)
A second sensor can be fitted to monitor generation.
Hardwired comms connection between controller and inverter
PRIVAT-LADEN
www.privat-laden.de
libbi
Controller
The fuse rating should be 3A
libbi
Stores surplus green energy for use when you need it most.
varisine™
Technology ensures loads are supplied by a clean AC sine wave – only the voltage is varied
Internet router
harvi (Wireless Sensor OPTION)
Harvests power from the grid sensor and transmits the import/export information to the zappi – Electrical wiring or batteries are not required.

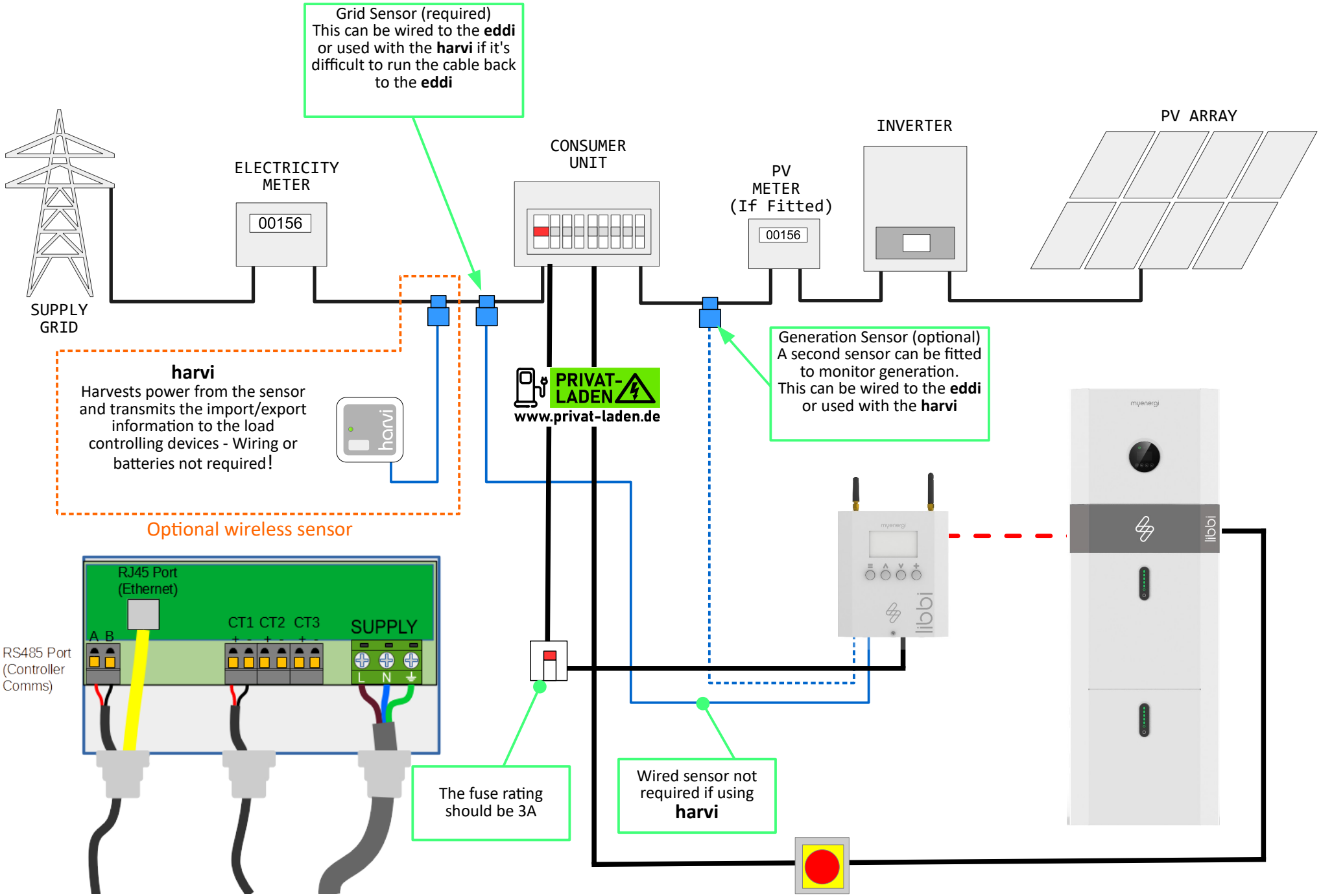
Grid Sensor (required)
This can be wired to the **eddi** or used with the **harvi** if it's difficult to run the cable back to the **eddi**
SUPPLY GRID
ELECTRICITY METER
00156
CONSUMER UNIT
PV METER (If Fitted)
00156
INVERTER
PV ARRAY
harvi
Harvests power from the sensor and transmits the import/export information to the load controlling devices - Wiring or batteries not required!
harvi
Optional wireless sensor
PRIVAT-LADEN
www.privat-laden.de
Generation Sensor (optional)
A second sensor can be fitted to monitor generation.
This can be wired to the **eddi** or used with the **harvi**
myenergi
eddi
myenergi
libbi
RJ45 Port (Ethernet)
A B
CT1 CT2 CT3
SUPPLY
L N
RS485 Port (Controller Comms)
The fuse rating should be 3A
Wired sensor not required if using **harvi**

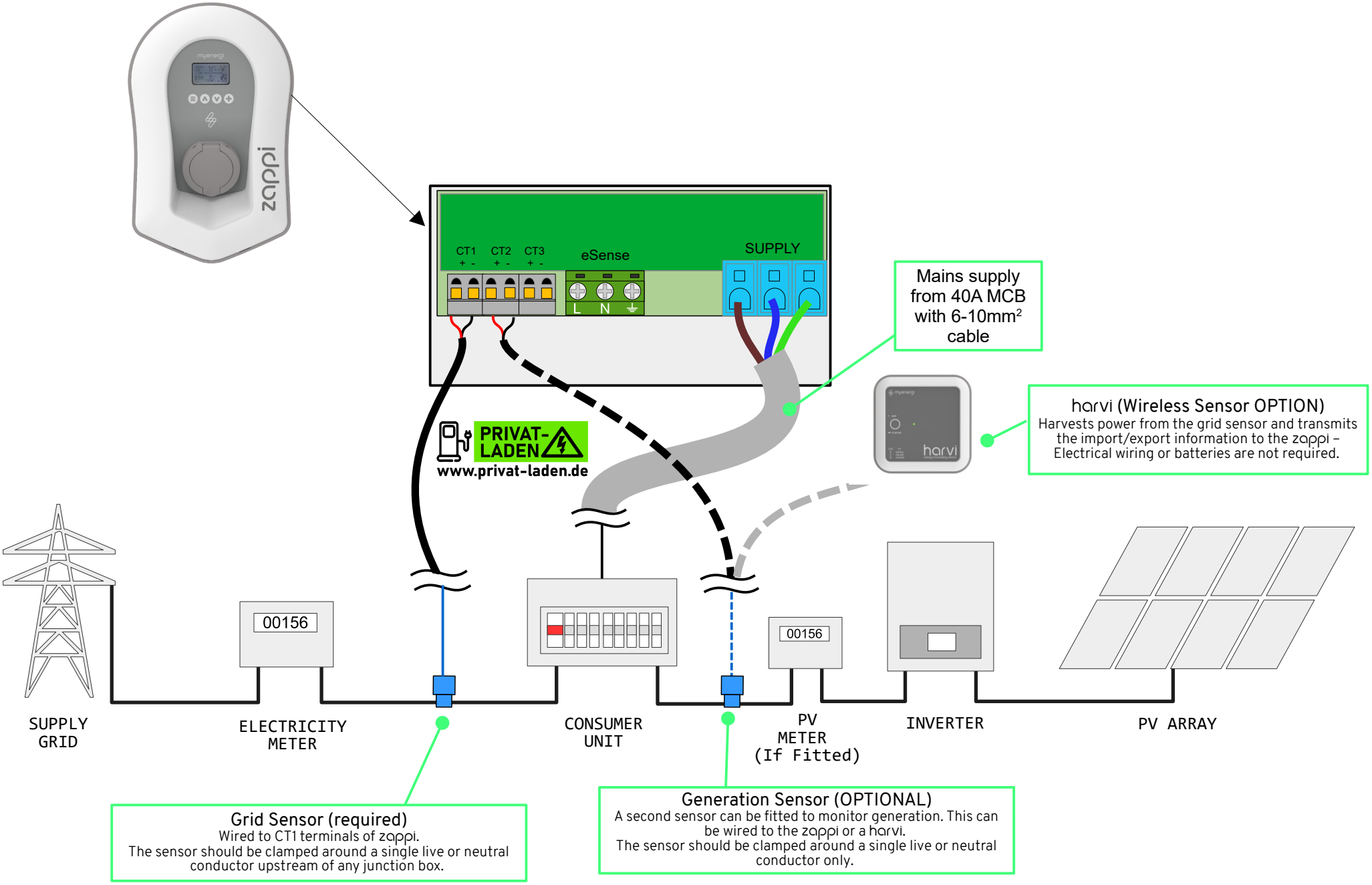
zappi
CT1
CT2
CT3
eSense
SUPPLY
L
N
Mains supply from 40A MCB with 6-10mm² cable
harvi (Wireless Sensor OPTION)
Harvests power from the grid sensor and transmits the import/export information to the zappi – Electrical wiring or batteries are not required.
harvi
PRIVAT-LADEN
www.privat-laden.de
00156
00156
SUPPLY GRID
ELECTRICITY METER
CONSUMER UNIT
PV METER (If Fitted)
INVERTER
PV ARRAY
Grid Sensor (required)
Wired to CT1 terminals of zappi.
The sensor should be clamped around a single live or neutral conductor upstream of any junction box.
Generation Sensor (OPTIONAL)
A second sensor can be fitted to monitor generation. This can be wired to the zappi or a harvi.
The sensor should be clamped around a single live or neutral conductor only.